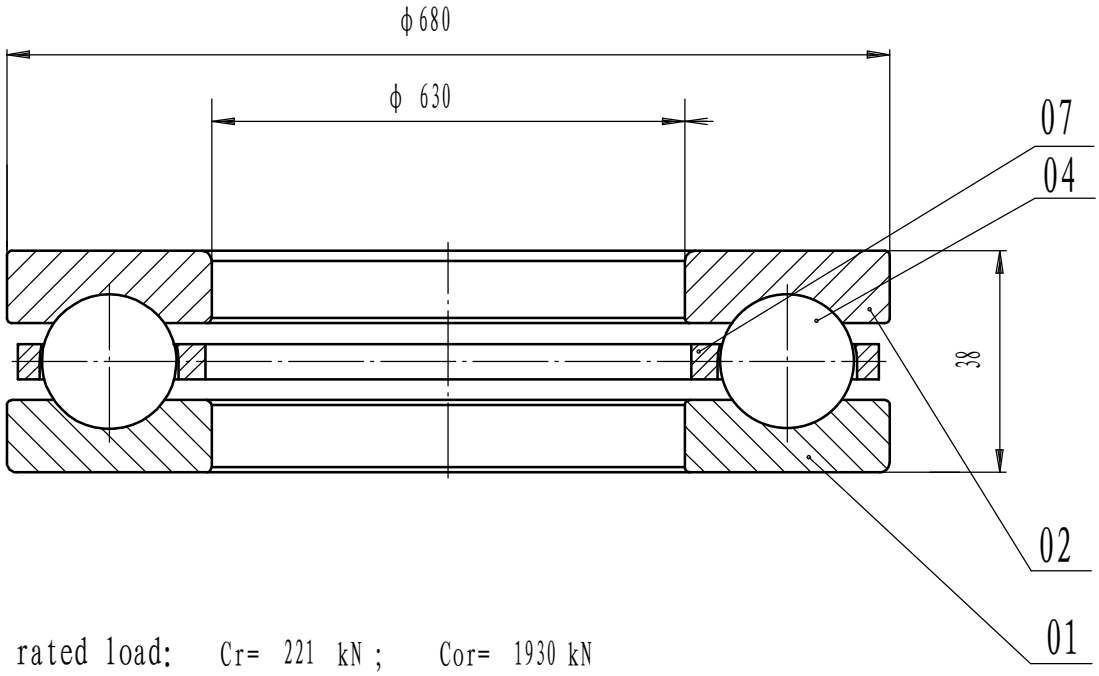


1 rated load: Cr= 221 kN ; Cor= 1930 kN

2 Heat treatment according to the current standards

Remark:

1. Luoyang Jiecheng Bearing Technology Co., Ltd is a technical Inc,specialize in designing and manufacturing thrust bearing, we can design and manufactur all kinds of thrust bearing according to client's requirement.

2. This drawing is reference for user,if you need formal drawing,please contact wth us sales@jcb-bearing.com, the official drawing will be sent after order confirmation.

| | | | | | | |
|---|---|---|---|---|---|---|
| 07 | cage | | steel | | | |
| 04 | steel ball | | steel GCr15-GB/T18254 | | | |
| 02 | shaft washer | | steel GCr15SiMn-GB/T18254 | | | |
| 01 | house washer | | steel GCr15SiMn-GB/T18254 | | | |
| serial | Name | Qty | Material | weight (kg) | | 12.5 KG |

Thrust ball bearing

510/630 F

Add: D1805, No.3 Lianmeng road, Luoyang, Henan,China.
Postal: 471003
Phone: +86-379-68611678
Fax: +86-379-68611679
E-mail: sales@jcb-bearing.com

Luoyang Jiecheng Bearing Technology Co., Ltd